Tolerances	Decimal	Fractional +/- xxx	Angular +/- xxx

Rev.	Revision note	Date	Sign	Check

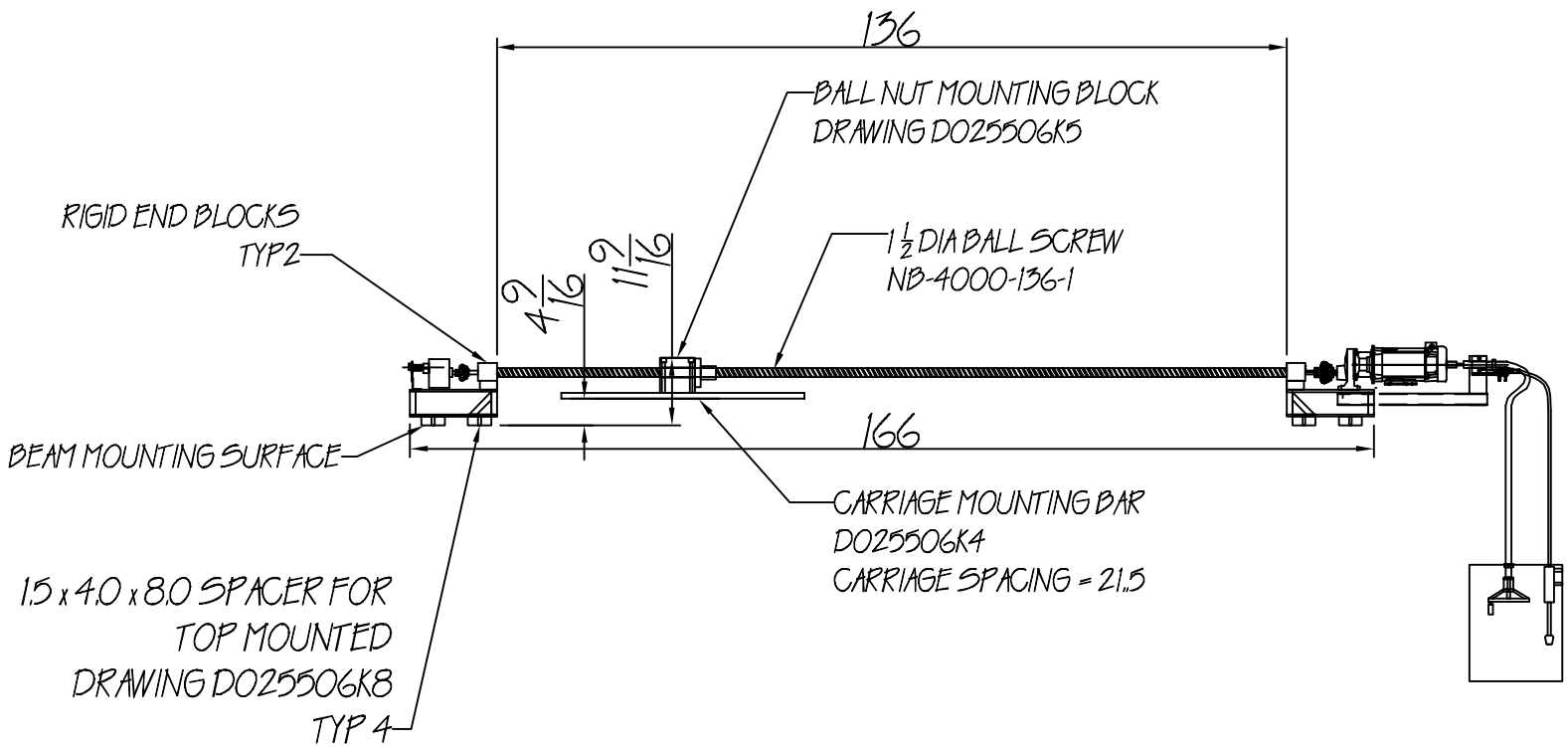

BALL SCREW ALIGNMENT:
1) BALL SCREW CENTERLINE MUST BE PARALLEL WITH LINEAR BEARING CENTERLINE WITHIN 1/8" FROM END BLOCK TO END BLOCK IN BOTH VERTICAL AND HORIZONTAL PLANES
2) CARRIAGE MOUNTING BAR MUST BE PARALLEL WITH BALLSCREW CENTERLINE WITHIN 1/16"
3) ANY DEVIATIONS FROM THESE TOLERANCES MUST BE SHIMMED ACCORDINGLY TO PREVENT PREMATURE FAILURE.

PEAK HORIZONTAL FORCE = 1400 LBS

MODIFICATIONS INCLUDE:
1 1/2 X 1.00 BALL SCREW
1 HP DC 1750RPM MOTOR
8:1 IN LINE REDUCER
KB HEAT SINK UPGRADE

NB-4000 MODIFIED TOP MOUNT		Drawn by KPK Checked by XXX
Material SEE BOM	Date 11/25/13	Scale 1:1
NB-4000-136 - 1 1/2" BALL SCREW		
brookfield industries inc. 99 West Hillside Ave. : Thomaston, CT P: (860) 283-6211 F: (860) 283-6123 info@brookfieldindustries.com	www.brookfieldindustries.com	Drawing No./File Name NB-4000-136-TM